EQ−4101
様式−26

HOSHIZAKI

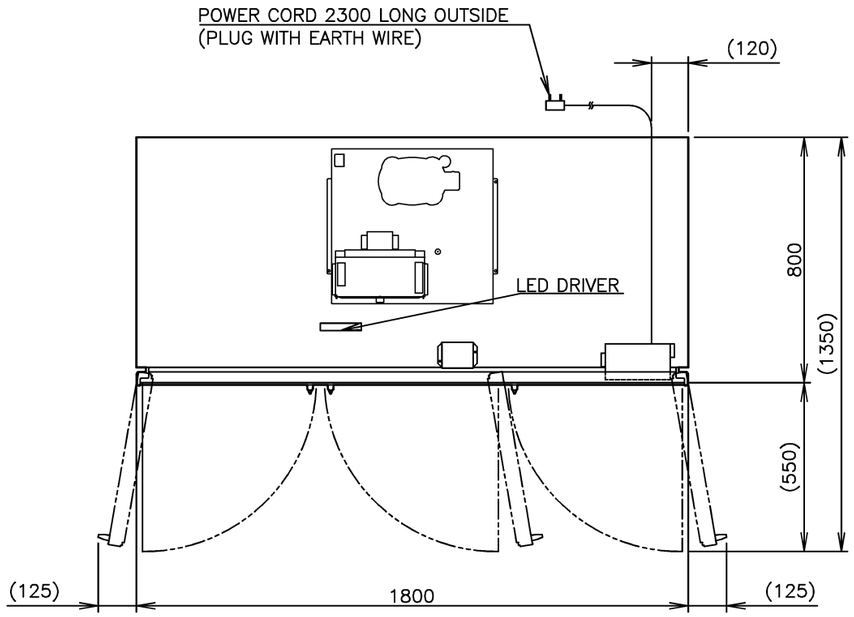

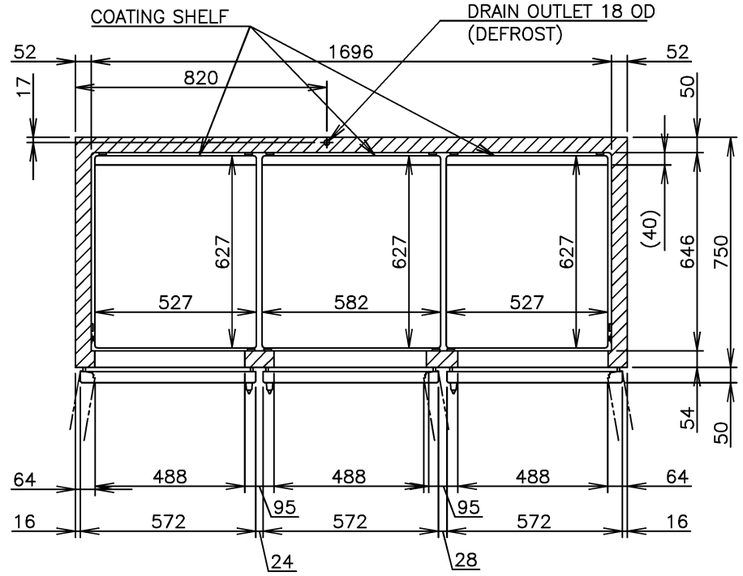

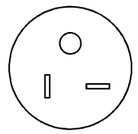

PLUG

ITEM	Hoshizaki Reach−in Refrigerator
MODEL	HR−188MA−TG
POWER SUPPLY	1 Phase 220V ~ 60Hz Capacity: 1.20kVA (5.45A)
AMPERAGE	Rated: 3.7A Starting: 13.1A
ELECTRIC CONSUMPTION	413W (Power Factor: *%) Heater: 446W Defrost: 446W
HEAT REJECTION	*W
POWER CORD	2.3m (Plug with Earth Wire)
EFFECTIVE CAPACITY	1632L
OUTSIDE DIMENSIONS	1800mm(W) x 800mm(D) x 1990(−2020)mm(H)
INSIDE DIMENSIONS	1696mm(W) x 646mm(D) x 1484mm(H)
EXTERIOR	Stainless Steel, Galvanized Steel(Top, Rear, Bottom) Double Layer Glass with Heat Reflection Film(Glass Door)
INTERIOR	Stainless Steel
INSULATION	Polyurethane Foam
INSULATION FOAM BLOWING AGENT	Cyclopentane
REFRIGERATION SYSTEM	Forced Air Circulation
DEFROST SYSTEM	Heater
COMPRESSOR	Hermetic
CONDENSER	Wire and Tube type, Air−cooled
EVAPORATOR	Fin and Tube type
REFRIGERANT	R404A
TEMPERATURE CONTROL	Microprocessor (Digital Temp. Indication) Adjustable from −2 to 12°C
DEFROST CONTROL	Microprocessor
ELECTRIC CIRCUIT PROTECTION	Earth Wire, Circuit Breaker
REFRIGERANT CIRCUIT PROTECTION	Motor Protector (Auto−reset)
LEG	Plastic Adjustable from 90 to 120mm
SHELF	12 pcs.
WEIGHT	202kg (Gross 244kg)
PACKAGE	Carton (Wooden Pallet) 1860mm(W) x 900mm(D) x 2075mm(H)
ACCESSORIES	Drain Hose x 1, Drain Pan x 1
OPERATING CONDITIONS	Ambient Temperature: 5 − 43°C Voltage Range: Rated Voltage ±6%

*We reserve the right to make changes in specifications and design without prior notice.

1. Install the product properly in accordance with the instructions on location, water supply/drain connections and electrical connections stated in the instruction and installation manuals provided.
   Allow 10mm extra space at the installation site to meet any installation requirements (additional spacing is also required for proper air flow and pipe connections).
2. The heat rejection is based on the reached pulldown temperature at ambient temperature of 35°C.
3. Product Code: R593−C226 (HTW)

*CUSTOMIZED
GLASS DOOR
LED

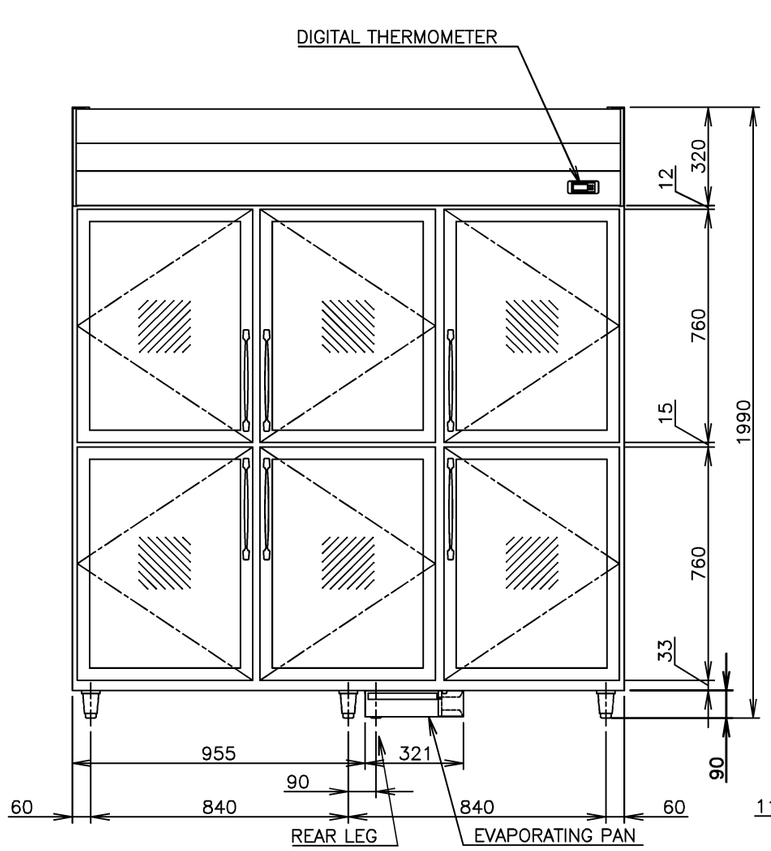

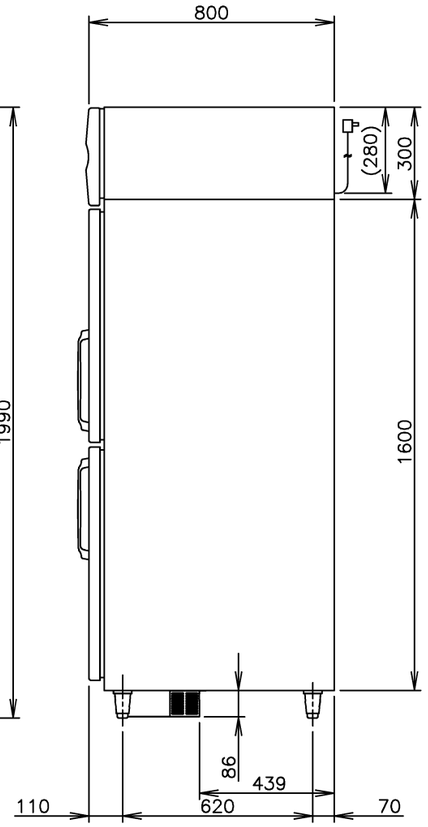

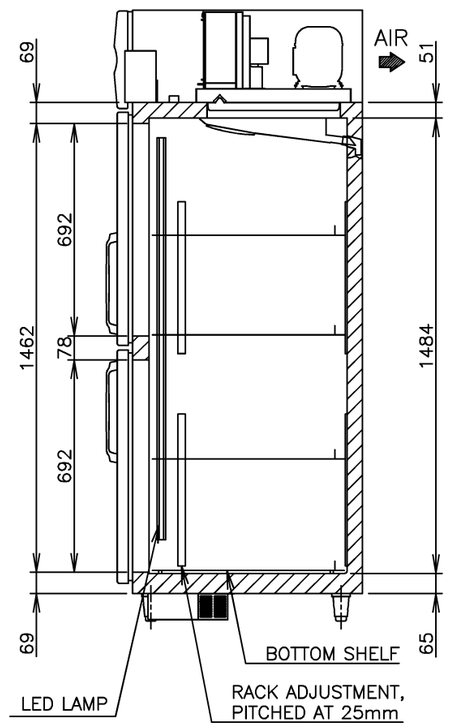

HOSHIZAKI REACH−IN REFRIGERATOR HR−188MA−TG

APPROVED	CHECKED	DESIGNED	DRAWN	SCALE	TRIGONOMETRY
NAGASE	NAGASE	ZHOU	ZHOU	1/20	
*	*	*		DATE	DRAWING NO.	SYMBOL
APPROVED	DESIGNED	SYMBOL	DATE	2020.10.23	D29351	

000520
施行