HOSHIZAKI

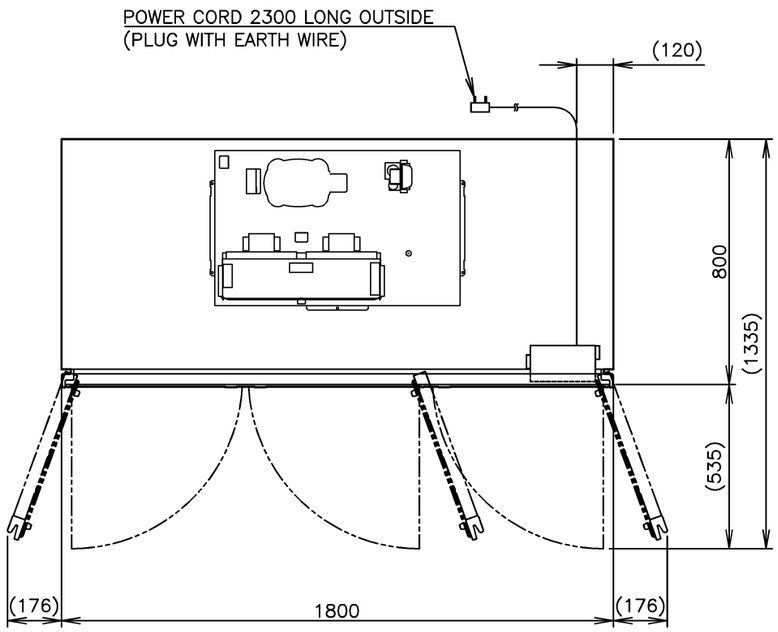

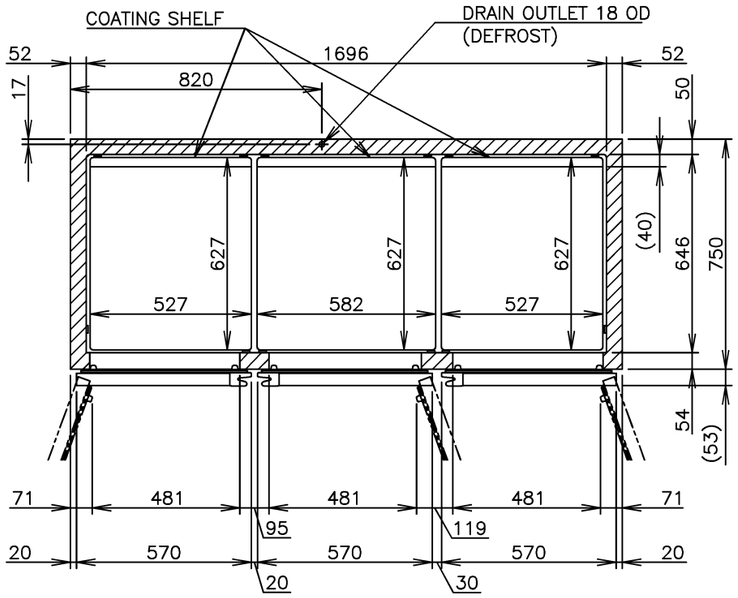

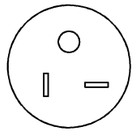

PLUG

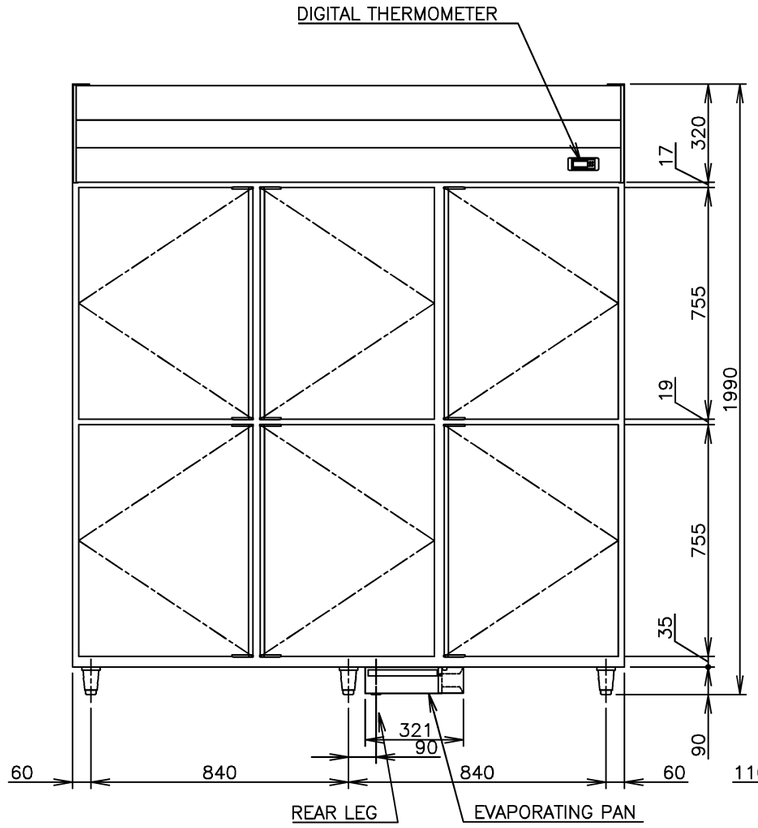

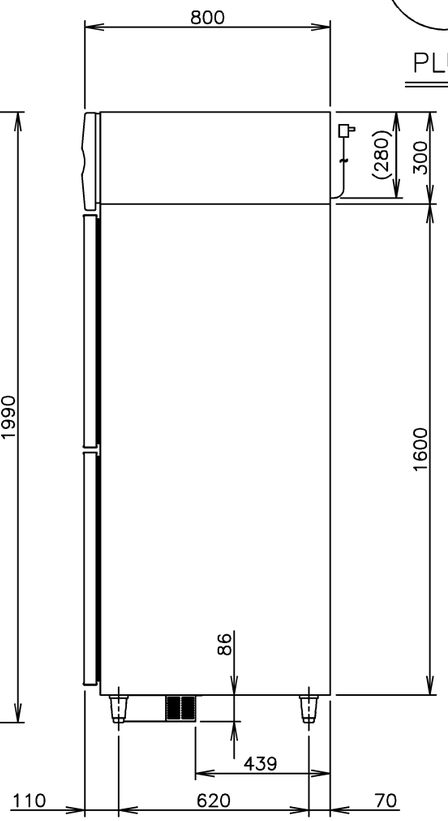

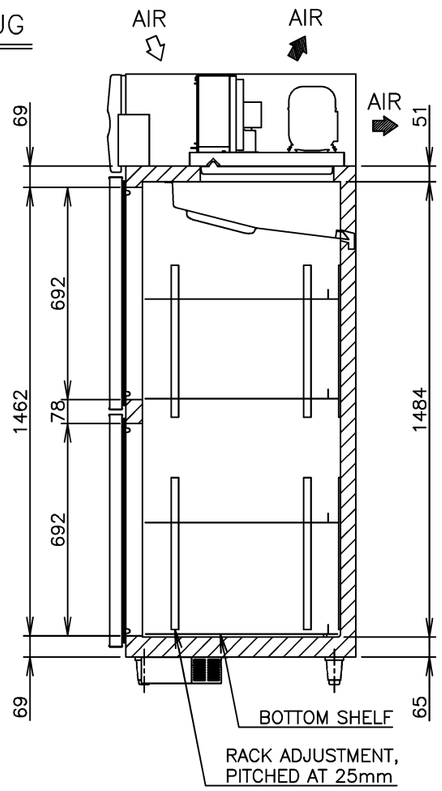

	ITEM	Hoshizaki Reach−in Freezer
	MODEL	HF−188MA−T
2	POWER SUPPLY	1 Phase 220V ~ 60Hz Capacity: 1.64kVA (7.45A)
2	AMPERAGE	Rated: 5.60A Starting: 23.4A
	ELECTRIC CONSUMPTION	917W Heater: 523W Defrost: 523W
	HEAT REJECTION	*W
	POWER CORD	2.3m (Plug with Earth Wire)
	EFFECTIVE CAPACITY	1622L
	OUTSIDE DIMENSIONS	1800mm(W) x 800mm(D) x 2050(−2080)mm(H)
	INSIDE DIMENSIONS	1696mm(W) x 646mm(D) x 1484mm(H)
	EXTERIOR	Stainless Steel, Galvanized Steel(Top, Rear, Bottom)
	INTERIOR	Stainless Steel, ABS Plastic(Door)
	INSULATION	Polyurethane Foam
	INSULATION FOAM BLOWING AGENT	Cyclopentane
	REFRIGERATION SYSTEM	Forced Air Circulation
	DEFROST SYSTEM	Heater
	COMPRESSOR	Hermetic
2	CONDENSER	Wire and Tube type, Air−cooled
	EVAPORATOR	Fin and Tube type
	REFRIGERANT	R404A
	TEMPERATURE CONTROL	Microprocessor (Digital Temp. Indication) Adjustable from −23 to −7°C
	DEFROST CONTROL	Microprocessor
	ELECTRIC CIRCUIT PROTECTION	Earth Wire, Circuit Breaker
	REFRIGERANT CIRCUIT PROTECTION	Motor Protector (Auto−reset)
	LEG	Plastic Adjustable from 90 to 120mm
	SHELF	12 pcs.
	WEIGHT	197kg (Gross 239kg)
	PACKAGE	Carton (Wooden Pallet) 1860mm(W) x 900mm(D) x 2075mm(H)
	ACCESSORIES	Drain Hose x 1, Drain Pan x 1
	OPERATING CONDITIONS	Ambient Temperature: 5 − 43°C Voltage Range: Rated Voltage ±6%

*We reserve the right to make changes in specifications and design without prior notice.

1. Install the product properly in accordance with the instructions on location, water supply/drain connections and electrical connections stated in the instruction and installation manuals provided.
   Allow 10mm extra space at the installation site to meet any installation requirements (additional spacing is also required for proper air flow and pipe connections).
2. The heat rejection is based on the reached pulldown temperature at ambient temperature of 35°C.
3. Product Code: R597−C200 (HTW)

HOSHIZAKI REACH−IN FREEZER HF−188MA−T

APPROVED	CHECKED	DESIGNED	DRAWN	SCALE	
KAWAKAMI	WANG	LIANG	SHAN	1/20	TRIGONOMETRY
NAGASE	WANGQ	2020.08.21	DATE	DRAWING NO.	SYMBOL
APPROVED	DESIGNED	SYMBOL	DATE	2019.06.14	D25256	2